PROCEEDINGS OF THE BROWN COUNTY
PUBLIC SAFETY COMMITTEE

Pursuant to Section 19.84 Wis. Stats., a regular meeting of the **Brown County Public Safety Committee** was held on Tuesday, March 2, 2010, in Room 200 of the Northern Building – 305 East Walnut Street, Green Bay, WI.

Present:	Andy Nicholson—Chair, Carole Andrews, Bill Clancy, Tom DeWane, Andy Williams.
Also Present:	Neil Basten, Don Hein, Tom Hinz, Debbie Klarkowski, Al Klimek, Dennis Kocken, John Luetscher, Lauri Marenger, Shelly Nackers, Nicole Naze, Jim Nickel, Cullen Peltier, Jayme Sellen, Susan Tilot, John Zakowski. Supervisors Kaster, Moynihan, and Wetzel. Media and Other Interested Parties.

(Items were taken out of order, although shown in proper format here.)

I. **Call Meeting to Order:**
The meeting was called to order by Chair Nicholson at 5:00 p.m.

II **Approve/Modify Agenda:**

Motion made by Supervisor Clancy and seconded by Supervisor Andrews to modify Agenda and move up Public Safety Communications Items Nos. 18-23 to after Item No. III and approve Agenda as modified. MOTION APPROVED UNANIMOUSLY.

III. **Approve/Modify Minutes of February 3, 2010:**

Motion made by Supervisor DeWane and seconded by Supervisor Andrews to approve the minutes. MOTION APPROVED UNANIMOUSLY.

(Items Nos. 18-23 taken next in order.)

1. **Review Minutes and Reports of:**
   a. **Fire Investigation Task Force General Membership (December 3, 2009):**

      Motion made by Supervisor Andrews and seconded by Supervisor Clancy to receive and place on file. MOTION APPROVED UNANIMOUSLY.

Circuit Courts:

2. **Discussion re: 2011 Budgets with Composite Levy Increase of Zero Dollars (referred from Exec Cmte):** See Item No. 19.

District Attorney:

3. **Discussion re: 2011 Budgets with Composite Levy Increase of Zero Dollars (referred from Exec Cmte):** See Item No. 19.

4. **Budget Adjustment Request (#09-152): Interdepartmental reallocation or adjustment (including reallocation from the County's General Fund) (See attached):**

   Motion made by Supervisor Williams and seconded by Supervisor Andrews to approve. MOTION APPROVED UNANIMOUSLY.

5. **Monthly Drug Criminal Complaint Numbers (standing item):** (Handouts filed at County Clerk's Office.)

   Motion made by Supervisor Clancy and seconded by Supervisor Andrews to have a *PowerPoint* presentation available at the May County Board Meeting. MOTION APPROVED UNANIMOUSLY.

(Chair Nicholson and Supervisor DeWane left at 6:41 p.m.)
(Supervisor Clancy acted as Chair for the remainder of the meeting.)

Medical Examiner:

6. **Discussion re: 2011 Budgets with Composite Levy Increase of Zero Dollars (referred from Exec Cmte):** See Item No. 19.

7. **Resolution re: In Support of Facilitating the Development and Operation of a Child Death Review (CDR) Northeast Regional Team:**

   Motion made by Supervisor Andrews and seconded by Supervisor Williams to approve. MOTION APPROVED UNANIMOUSLY.

Clerk of Courts:

8. **Discussion re: 2011 Budgets with Composite Levy Increase of Zero Dollars (referred from Exec Cmte):** See Item No. 19.

9. **Budget Adjustment Request (#09-161): Interdepartmental reallocation or adjustment (including reallocation from the County's General Fund) (See attached):**

   Motion made by Supervisor Andrews and seconded by Supervisor Williams to approve. MOTION APPROVED UNANIMOUSLY.

10. **Budget Adjustment Request (#10-23): Interdepartmental reallocation or adjustment (including reallocation from the County's General Fund) (See attached):**

    Motion made by Supervisor Williams and seconded by Supervisor Andrews to approve. MOTION APPROVED UNANIMOUSLY.

Sheriff:

11. **Discussion re: 2011 Budgets with Composite Levy Increase of Zero Dollars (referred from Exec Cmte):** See Item No. 19.

12. **Key Factor Report and Jail Average Daily Population by Month and Type for the Calendar Year 2010:**
Sheriff Kocken reported that the jail population was down, so a pod was closed. He added that January's overtime was the second lowest in the past 10 years. He said many jails statewide are reporting a low census.

Motion made by Supervisor Williams and seconded by Supervisor Andrews to receive and place on file. MOTION APPROVED UNANIMOUSLY.

13. **Budget Adjustment Request (#10-08): Increase in expenses with offsetting increase in revenue:**

Motion made by Supervisor Andrews and seconded by Supervisor Williams to approve. MOTION APPROVED UNANIMOUSLY.

14. **Budget Adjustment Request (#10-12): Increase in expenses with offsetting increase in revenue:**

Motion made by Supervisor Andrews and seconded by Supervisor Williams to approve. MOTION APPROVED UNANIMOUSLY.

15. **Budget Adjustment Request (#10-13): Increase in expenses with offsetting increase in revenue:**

Motion made by Supervisor Williams and seconded by Supervisor Andrews to approve. MOTION APPROVED UNANIMOUSLY.

16. **Ordinance re: To Create Sec. 30.09 of the Brown County Code Entitled "Purchase and Sale of Scrap Metal."** ***Held for 1 month:***
Supervisor Williams expressed concern that the Sheriff's Department could walk into any business and make the owner produce the records without a warrant.

As additional concerns and discussion ensued, Supervisor Clancy suggested that scrap metal dealers appear before the Committee to explain whether or not the requirements in this ordinance would be a hardship.

Motion made by Supervisor Andrews and seconded by Supervisor Williams to hold for 1 month. MOTION APPROVED UNANIMOUSLY.

17. **Sheriff's Report:**
Sheriff Kocken said it appears that the Sheriff's Department will come in somewhere between $200,000 and $300,000 in the black for 2009; however, the final figures are not available yet.

Motion made by Supervisor Andrews and seconded by Supervisor Williams to receive and place on file. MOTION APPROVED UNANIMOUSLY.

17a. **Update re: Director, Public Safety Vacancy.** ***Referred from February Public Safety mtg:***
Debbie Klarkowski, Human Services Director, stated that there was a request at the last Public Safety Meeting for a study of the salaries for the Public Safety Director.

Supervisor Clancy opined that the person hired should be the same caliber and expressed concern with starting wages that were too low; otherwise, the person could receive training here and then move on to another county because of the pay range.

Supervisor Williams opined that the recommended grade range is appropriate.

Supervisor Andrews said it would be helpful to compare job duties and skill sets in other counties, to which Ms. Klarkowski indicated this information could be provided.

Executive Hinz opined that this is a good range; and he stated that this position would not be filled unless the right person applied. When asked, Executive Hinz replied that Shelley Nackers, Communications Manager, would be Acting Director in the interim.

Motion made by Supervisor Williams and seconded by Supervisor Andrews to accept HR's recommendation and have HR report back. MOTION APPROVED UNANIMOUSLY.

Public Safety Communications:

18. **Public Safety Division 2009 to 2010 Carryover Funds:**

Motion made by Supervisor Andrews and seconded by Supervisor Williams to approve. MOTION APPROVED UNANIMOUSLY.

19. **Discussion re: 2011 Budgets with Composite Levy Increase of Zero Dollars (referred from Exec Cmte):**

Motion made by Supervisor Williams and seconded by Supervisor DeWane to take Items Nos. 2, 3, 6, 8, 11, and 19 together. MOTION APPROVED UNANIMOUSLY.

Motion made by Supervisor Williams and seconded by Supervisor Clancy to receive and place on file Items Nos. 2, 3, 6, 8, 11, and 19. MOTION APPROVED UNANIMOUSLY.

20. **Budget Adjustment Request (#10-06): Increase in expenses with offsetting increase in revenue:**

Motion made by Supervisor Andrews and seconded by Supervisor Clancy to approve. MOTION APPROVED UNANIMOUSLY.

21. **Resolution re: To approve Intergovernmental Agreement between Ashwaubenon and County Concerning Transfer of Dispatch Responsibility:** Chair Nicholson expressed his displeasure in not receiving notification that this item was going to be placed on the agenda. When Chair Nicholson asked John Luetscher, Corporation Counsel, why this was placed on the agenda, Mr. Luetscher stated that this was requested by Tom Hinz, County Executive.

The Committee members indicated that the Resolution had been given to them right before this meeting. Supervisor DeWane stated that he needs time to look at this information before voting on it. Supervisor Andrews asked if the parties involved had reached an agreement, to which Mr. Luetscher replied that as far as he knew the parties had recently agreed to this. Mr. Luetscher stated that he wanted to make it absolutely clear that he is not asking anyone to jump the gun and that he provided this information as soon as it was available; he added that if the Committee is not prepared to go forward, that is the Committee's prerogative.

Chair Nicholson stated that he feels this is a big step for Brown County and that he understood from the last County Board Meeting that more information would be provided for review before this step was to be taken. He added that he guessed Tom Hinz and Mike Aubinger, Ashwaubenon Village President, are ready for an agreement, but the County Board is not.

Motion made by Supervisor Andrews and seconded by Supervisor Clancy to take a 5 minute break to review the information and reconvene to allow those present to speak today. NO VOTE TAKEN.

Chair Nicholson said he would not support that, because he feels this is premature. He added that he feels Tom Hinz and Mike Aubinger are rushing this issue, and this is a big project. He apologized to those present to speak today, and opined that pressure is being put on this Committee to push this through.

Supervisor DeWane stated that a 5-minute break would not be helpful to him, and that he needs more time. He added he would be willing to open the floor but did not see a need for a break.

Motion amended by Supervisor Andrews and seconded by Supervisor Clancy to suspend the rules and open the floor so interested parties could speak. MOTION APPROVED UNANIMOUSLY.

Jason Lemmens, Ashwaubenon Public Safety Dispatch
He expressed surprise that this is happening so quickly and asked that the dispatchers and employees be part of the merger with Brown County if that is what is chosen. He stated that the employees want to be treated fairly and that this affects not only the nine positions in dispatch, but nine lives as well. He requested that employee positions be taken care of in this newly formed union.

Mike Aubinger, 1288 Carole Lane
Mr. Aubinger stated that he had no role in this other than he went to the County and asked what possibility there was of merging the two systems together. He said he did not talk to dispatchers until he was sure that the County was open to this merger. He said he has appeared before the Public Safety Committee twice

concerning this and asked for the intergovernmental agreement during the last appearance, so that when this issue came before the Committee again there would be something to consider. He said it did not matter to him whether this issue was taken tonight or next month, but offered to answer questions tonight. He continued by saying there was no ill-will on the part of the Village of Ashwaubenon as to why this was put before the Committee so quickly. He added that the timeline had been set by Brown County. Mr. Aubinger expressed appreciation to the Committee and said he looks forward to cooperation in the future.

Motion made by Supervisor DeWane and seconded by Supervisor Andrews to return to regular order of business. MOTION APPROVED UNANIMOUSLY.

Supervisor Williams agreed that there were two closed-session meetings and said there may be taxpayers who would want to respond to this. He indicated that for this reason he did not feel the Committee work could be done properly if this is approved tonight.

Motion made by Supervisor Williams and seconded by Supervisor Andrews to hold for one month. NO VOTE TAKEN.

Supervisor DeWane said he knows Ashwaubenon has been working with the County, has answered all the questions, and was probably as surprised as the Committee to see this at the last minute. He added that he looks forward to working this out.

Chair Nicholson said he agrees with Supervisors Williams and DeWane and believes this can be an easy transition, but this is way too premature. He added that this should have been under closed session, and that the Committee and County Board should be included. He asked Executive Hinz to respond.

Executive Hinz stated that he takes offense at being accused of trying to slip something past the County Board. He said he has not done that; he is not going to do that; and he hasn't done that in the past. Executive Hinz indicated that this issue has been discussed for a year. He said the requested figures have been provided, as well as an intergovernmental agreement that has not been signed. He reported that it would take approximately 9 months to accomplish this. He added that it is up to the Committee to either accept or defer this agreement; however, he explained that deferring this for a month may mean that this cannot be accomplished until February, 2011.

Supervisor Andrews asked when this document was given to the County Board office, to which Executive Hinz replied that this happened in the past couple of days. Supervisor Andrews explained that the issue tonight is not whether or not the Committee agrees with this, but rather that the Committee received this document without sufficient time to do its due diligence.

Supervisor DeWane opined that this is an attempt to push this through; because Executive Hinz stated there is a timetable for making a decision on the information that was just received.

Motion made by Supervisor Clancy and seconded by Supervisor Andrews to call a special meeting to discuss this at the prerogative of Chair Nicholson. Vote taken. Ayes—4 (Andrews, Clancy, Nicholson, Williams) Nays—1 (DeWane). MOTION CARRIED.

Supervisor Williams pointed out that the next County Board Meeting is on March 17th; so the meeting would need to be either next week or not.

Supervisor DeWane asked Jim Nickel, Director of Public Safety Communication, if the delay would affect the project, to which Mr. Nickel responded that it would prevent meeting the January, 2011, date.

Chair Nicholson asked Supervisor Kaster if the need to have this done right away was discussed at the meeting he attended, to which Supervisor Kaster replied that he recalled that more figures were to be presented and that he was very surprised to see this on the agenda.

Supervisor Williams stated that during each of the previous two meetings the request made of the Committee was for approval to continue the process and that no concrete decisions had been made. He opined that the only responsible decision today would be to take no action, because the constituents should have a chance to speak on this issue. He said to rush this through would be irresponsible, because this is a significant amount of money.

22. **Discussion re: Placement of Wind Turbines and the Impact on Microwave Radio Links:**
Supervisor Clancy stated that the media has reported that the Ledge Wind project is going forward in southern Brown County, and there have been some misgivings about the effect on the environment and the 911 communication system.

Motion made by Supervisor Clancy and seconded by Supervisor DeWane to suspend the rules and open the floor so interested parties could speak. MOTION APPROVED UNANIMOUSLY.

Paul Gregg, N8763 Isaar Road, Seymour (Outagamie County)
Mr. Gregg stated that he has a Masters Degree in Electrical Engineering. He said radio communications interference occurs when there are several active radio sources. He added that there is a vast amount of knowledge in this area through the IEEE (Institute of Electrical and Electronics Engineers).

Steve Deslauriers, 2889 Wayside Road, Greenleaf
Mr. Deslauriers urged the Brown County Board to look into a wind energy conversion ordinance. He said the county has no voice in this one-half billion dollar wind farm; because there is no ordinance showing Brown County's intent on how the health and safety of residents will be protected. He opined that it is critically important that the PSC (Public Service Commission) is aware of Brown County's intent.

Mr. Deslauriers stated that he is a firefighter and EMT (Emergency Medical Technician) in Morrison. He said the emergency paging and radio communication system is problematic at times; and he expressed concern regarding the impact of wind turbines on those systems, as well as flight rescue.

Concerning groundwater, Mr. Deslauriers added that this massive construction project will almost guarantee some measure of well contamination in southern Brown County.

Herb Coussons, 6649 Ledgetop Drive, Greenleaf
Dr. Coussons stated that he is a physician in Green Bay and lives in the Greenleaf area. He said he has done research himself and has formed the opinion that there are health concerns for those who live around wind turbines, in areas such as groundwater, sound—audible and inaudible, and flicker effects. He encouraged all supervising bodies (townships, municipalities, counties, etc.) to send messages to the State that the citizens do want a say in what goes on in their back yards.

Dr. Coussons added that Invenergy has admitted, on information submitted to the PSC, that the wind turbines would potentially interfere with microwave communications

Richard Koltz, 2372 Day Street, Greenleaf
Mr. Koltz stated that he signed up for a wind tower and, after seeing what it does in many ways, has changed his mind. He asked the County Board to put the brakes on this and take a closer look at this issue, because tax dollars are being used for something that does not work and is not self-sufficient. He said he thinks it is our own money ruining our lives and our neighborhoods.

Carl Johnson, 1893 Wayside Road
Mr. Johnson stated that as technologies have become larger, a new type of pollution has occurred called low frequency noise (LFN). He said buildings will not stop the LFN, and it travels long distances. He requested that this Committee, the County Board, and the Board of Health look into this issue of LFN which would occur with the wind turbines. He reported that LFN causes sleep disturbances, headaches, and ringing in the ears, which can lead to cardio-vascular disease. He asked the County Board to send a message to the State about what is wanted for the health and safety of the community.

Marilyn Nies, 8122 Morrison Road, Greenleaf
Ms. Nies stated that she has a 5-year old daughter with a heart condition. She said she feels as though this is being jammed down her throat and does not feel any significant studies have been done on the health issues. She questioned whether or not it would hurt to postpone this a year or two until real studies can be accomplished.

Carl Kuehne, 4479 Heritage Heights Road, DePere
Mr. Kuehne read some quotes (see attachments) and spoke against putting in wind turbines. He presented and reviewed four studies (filed at the County Clerk's Office) concerning the impact of wind turbines.

Mr. Kuehne stated that wind turbines have been in Europe for decades and that the report from the World Health Organization indicates the severe impact with regard to night noise. He said Spain, Germany, and Denmark reported that wind turbines are a total failure economically. He said the energy cost is the highest per kilowatt of any alternative energy the government subsidizes; and when the government subsidy stopped, the wind turbine farms failed.

Mr. Kuehne asked the Committee to take a serious look at this issue; because the PSC will be reviewing wind farms in various areas. He said the recommendations of local governments are clearly taken into consideration by the PSC. He opined that it would be extremely important for the County to at least consider a moratorium on all wind turbine placements in Brown County to give the County an opportunity to study the health and economic impacts.

Glen Schwalbach, 1090 Moonriver Drive, DePere
Mr. Schwalbach said there are some issues with microwave interference. He suggested having microwave operators talk to the Committee, as well as Invenergy.

Motion made by Supervisor DeWane and seconded by Supervisor Williams to return to regular order of business. MOTION APPROVED UNANIMOUSLY.

Supervisor DeWane suggested starting a low frequency ordinance for Brown County right away. He said he has concerns with the interference of radio systems. He asked Mr. Luetscher how much authority the Committee has. Mr. Luetscher said anything more than 100 megawatts is regulated by the PSC; however, the County has the right to participate in the process. He opined that Brown County should raise the issue of radio inoperability. He added that the PSC reviews the current law when making decisions, so Brown County could have some influence by legislating. For wind farms under 100 megawatts, Mr. Luetscher said Brown County could regulate even though the State has curtailed Brown County's authority in that area. He added that Brown County could regulate with respect to safety and health; however, he did not know if the County would have the authority to enact a moratorium. He added that if the radio inoperability issue is going to be pursued, this, as well as the other issues, should be pursued through the PSC.

Supervisor DeWane stated that everything possible should be done to make certain that people in Brown County do not suffer in any way; and he said he believes an ordinance should be enacted as soon as possible even though the talks continue.

Motion made by Supervisor DeWane and seconded by Supervisor Clancy to suspend the rules and open the floor so interested parties could speak. MOTION APPROVED UNANIMOUSLY.

Steve Deslauriers, 2889 Wayside Road, Greenleaf
Mr. Deslauriers explained about a case in Calumet County and stated that it is believed that the moratorium is still an effective tool to slow down the process.

Supervisor Williams asked Mr. Luetscher if Brown County could regulate low frequency noise and interference with microwave signals and assess daily fines for the violations. Mr. Luetscher replied that if the State gives Brown County that authority this could be done, but not with 100 megawatt and larger wind farms. Supervisor Williams added that he is not talking about a moratorium or regulating, but about the right of the homeowner to recover based on what is happening to property.

Carl Johnson, 1893 Wayside Road, Greenleaf
Mr. Johnson cautioned the Committee to make certain that the law that is enacted does not prohibit wind energy projects. He added that LFN comes from a variety of sources and suggested that the County look at all possibilities. He also referred to an editorial in today's "Wall Street Journal" calling for a national investigation of this health problem as it relates to wind energy.

Carl Kuehne, 4479 Heritage Heights Road, DePere
Mr. Kuehne explained that one of the purposes of a moratorium would be to allow the County to do a good process of investigation. He added that the law is truly complex in this area, and the impact of the municipality in reviewing the health and safety concerns is still permitted and considered by the PSC. So he opined that this should be the focus.

Motion made by Supervisor Clancy and seconded by Supervisor DeWane to return to regular order of business. MOTION APPROVED UNANIMOUSLY.

Motion made by Supervisor Clancy and seconded by Supervisor Andrews to have a special advisory committee formed to research this and report back. MOTION APPROVED UNANIMOUSLY.

Note: The following individuals indicated opposition to the wind turbines but chose not to speak:
Kerry Ambrose – 2890 Hill Road, Greenleaf
Curt Hilgenberg – 7212 Holly Mor Road, Greenleaf
Mark Beyer – 2972 Wayside Road

23. **Director's Report:**
Mr. Nickel distributed and reviewed handouts (copies attached).

Concerning the microwave interference, Mr. Nickel said there is an entire body of knowledge indicating that wind turbines affect microwaves; and he thinks the issue is that sites are not chosen yet and the corridors defined.

Motion made by Supervisor Andrews and seconded by Supervisor DeWane to receive and place on file. MOTION APPROVED UNANIMOUSLY.

(Item No. 1 taken next.)

Other:

24. **Audit of Bills:**

Motion made by Supervisor Andrews and seconded by Supervisor Williams to pay the bills. MOTION APPROVED UNANIMOUSLY.

25. **Such other Matters as Authorized by Law:** None.

Motion made by Supervisor Andrews and seconded by Supervisor Williams to adjourn at 7:22 p.m. MOTION APPROVED UNANIMOUSLY.

Respectfully submitted,

Lisa M. Alexander
Recording Secretary

March 17, 2010

TO THE HONORABLE CHAIRMAN AND MEMBERS
OF THE BROWN COUNTY BOARD OF SUPERVISORS

Ladies & Gentlemen:

RESOLUTION TO APPROVE INTERGOVERNMENTAL AGREEMENT BETWEEN THE VILLAGE OF ASHWAUBENON AND THE COUNTY OF BROWN FOR CONSOLIDATION OF PUBLIC SAFETY DISPATCH

WHEREAS, Brown County provides emergency communication services through its Public Safety Communications Center, and the Center operates the Public Safety Answering Point for 9-1-1- service in the county ; and

WHEREAS, the Village of Ashwaubenon operates its own public safety dispatching services in cooperation with the Public Safety Communications Center; and

WHEREAS, the Village wants to transfer responsibility for emergency dispatches to the Center; and

WHEREAS, both parties want to accomplish the transfer of dispatch responsibility in an efficient, cost effective manner with no loss of emergency services to Village residents.

NOW, THEREFORE, BE IT RESOLVED that the Brown County Board of Supervisors hereby approves and adopts the attached Intergovernmental Agreement.

Respectfully submitted,

PUBLIC SAFETY COMMITTEE

Approved By:

_____
COUNTY EXECUTIVE

Date Signed: _____

Final Draft Approved by Corporation Counsel

Fiscal Impact:

BOARD OF SUPERVISORS ROLL CALL #_____

_____

Motion made by Supervisor _____

Seconded by Supervisor _____

SUPERVISOR NAMES	DIST. #	AYES	NAYS	ABSTAIN
WARPINSKI	1			
DE WANE	2			
NICHOLSON	3			
THEISEN	4			
KRUEGER	5			
HAEFS	6			
ERICKSON	7			
BRUNETTE	8			
ZIMA	9			
EVANS	10			
VANDER LEEST	11			
JOHNSON	12			
DANTINNE, JR	13			

SUPERVISOR NAMES	DIST. #	AYES	NAYS	ABSTAIN
LA VIOLETTE	14			
ANDREWS	15			
KASTER	16			
KNIER	17			
WILLIAMS	18			
FLECK	19			
CLANCY	20			
WETZEL	21			
MOYNIHAN	22			
SCRAY	23			
HOEFT	24			
LUND	25			
FEWELL	26			

Total Votes Cast _____

Motion: Adopted _____ Defeated _____ Tabled _____

INTERGOVERNMENTAL AGREEMENT BETWEEN THE VILLAGE OF ASHWAUBENON AND THE COUNTY OF BROWN FOR CONSOLIDATION OF PUBLIC SAFETY DISPATCH

This Agreement is made between the Village of Ashwaubenon, Village herein, and the County of Brown, County herein. The Agreement is intended to effect the transfer of emergency dispatch responsibility from the Village to the County beginning in January 2011 and is made pursuant to §66.0301 (2) Wisconsin Statutes. The effective date of this agreement shall be _____, 2010.

WHEREAS, the County provides emergency communication services through its Public Safety Communications Center, Center herein, and the Center operates the Public Safety Answering Point for 9-1-1- service in the county ; and

WHEREAS, the Village operates its own public safety dispatching services in cooperation with the Public Safety Communications Center; and

WHEREAS, the Village wants to transfer responsibility for emergency dispatches to the Center; and

WHEREAS, both parties want to accomplish the transfer of dispatch responsibility in an efficient, cost effective manner with no loss of emergency services to Village residents.

In consideration of the mutual promises set forth in this Agreement, the parties agree:

1) Dispatch Responsibility.

Brown County, through the Center, will take over emergency communication dispatch responsibility for the Village beginning in January 2011 with an estimate of the "cutover" date being January 10, 2011.

2) Staffing.

Brown County will fund eight additional telecommunicator positions for the Center in its 2011 County Budget to insure complete dispatch service is provided to the Village.

3) Hiring of Village Telecommunicators.

The County will hire up to six telecommunicators employed with the Village on the "cutover" date to partially fill the added telecommunicator positions. The hiring of these six telecommunicators will be subject to the following:

a) The Village will be responsible to pay these persons any accumulated sick leave or other benefit accrued during their term of employment for the Village.

b) Each of the six persons may have to pass the telecommunicator position exam administered by the County Department of Human Resources.

c) Each of the six persons will have to complete the training program for a Center telecommunicator and will serve a probationary period of employment with the County.

4) Newly Hired Telecommunicators.

The County will hire at least two new telecommunicators to begin training on April 1, 2010. The Village will pay the labor cost for each of these newly hired telecommunicators for the nine month period from April 1 through December 31, 2010. The estimated labor cost (wages and benefits) for each person will be $45,500 for this nine month period. If fewer than six Village telecommunicators apply for hire by the County, then the County will hire additional new

21

telecommunicators so that the total of newly hired telecommunicators and Village telecommunicators hired equals eight additional positions. The Village will be responsible for the labor cost of $45,500 for each additional newly hired telecommunicator.

5) Training of Telecommunicators.

The County will provide staff from the Center to train the Village's telecommunicators for employment at the Center during 2010. The Village will be responsible for paying overtime labor costs for the Village telecommunicators and any Brown County PSC overtime so they are available for training, and the Village will reimburse Brown County for the overtime cost associated with the County training instructor. These overtime costs are estimated at $55,000 and $4,000, respectively.

6) Equipment.

The parties will conduct a technical review to determine the exact equipment that will be purchased or relocated to the Center to provide operation at the Village radio console at the Center. The parties estimate the cost to the Village for connection and equipment relocation to be $55,000.00. The new equipment and system testing will be completed in 2010 prior to the "cutover" date.

7) Approval.

This Agreement shall become effective upon approval by the governing body of each party by the adoption of a resolution.

8) Term of Agreement.

21

The initial term of the Agreement shall be for five years from the "cutover" date and shall thereafter automatically renew for additional periods of five years. No party shall terminate the Agreement during the initial five year period. After the initial five year period, either party can terminate the Agreement upon a minimum 12 month written notice to the other party.

Thomas Hinz, Executive (Date) County of Brown	Michael Aubinger, President (Date) Village of Ashwaubenon

21

Microwave Relay Systems and Wind Turbines

--According to the Wisconsin Public Service Commission:

Wind turbines can interfere with microwave paths by blocking or partially blocking the line-of-sight path between microwave transmitters and receivers.

Environmental Impact Statement
for Glacier Hills Wind Farm, 2009

--According to one consultant:

Rotating turbine blades cause microwave receivers to lose signal or synchronization with the other end. The microwave never resynchronizes unless the blades stop turning.

If a circuit fails due to turbine blade rotation, the computer running the microwave relay system will keep trying to pass the message without success.

"If a synchronized public safety signal fails, the ambulance or fire truck may not come to someone's door!"

Leonard J. Koehnen and
Associates, February 2005

--Invenergy's **own expert** --Comsearch--acknowledges the problem:

Wind turbines "may pose an interference threat to microwave systems. . . [they] can block the line-of-sight operation of microwave paths potentially impacting path performance."

Comsearch E-News,
November 2002

WIRELESS COMMUNICATIONS ENGINEERING
SERVICES FOR A NEW MILLENNIUM
www.911radio.net

WHITE PAPER

WIND FARMS AND THEIR EFFECTS ON PUBLIC SAFETY RADIO SYSTEMS

Revised February 24, 2005

SUMMARY OF WHITE PAPER:

In many parts of the country, wind farms are being installed to alleviate the need to build more electrical generating plants. These wind farms can have a profound effect on your public safety, utility, and governmental microwave systems by chopping and reflecting the microwave beam. .

WHAT YOU SHOULD DO:

Notify your city and county zoning authority that any application for a wind farm can profoundly affect your emergency communications system and a design review focused on the wind farm's effects on critical communication systems.

BACK GROUND:

As a source for renewable energy, wind farms are being installed throughout the upper Midwest. Being subsidized by the US Government heightens the interest of entrepreneurs in building these for profit. Some wind farms contain hundreds of windmills. One of the biggest is on Buffalo Ridge between Marshall and Pipestone, Minnesota. Other large farms are northwest of Mason City, Iowa near Joice and northwest of Algoma, WI. The largest of the windmills and farms are in the western US.

The zoning laws of each state vary based on the generating size of the group of windmills, called a wind farm. Below a certain size in generating capacity, local city and county planning and zoning regulate these farms. Above a megawatt threshold, the state enters the picture especially in Minnesota.

Wind farms have their down side that is often overlooked by champions looking for clean renewable energy and profits.

1. Windmills have aviation hazard flashing beacons displaying a flashing light display. Some are set in a sequence to flash together or individually as a marquee across the farm. Because most windmills are above 201 feet, the Federal Aviation Administration dictates they be marked as an aviation hazard. The hazard beacon can be red at nighttime, medium intensity white strobe lights used in daytime (sometimes at night), or a combination of both.
2. The metallic blades chop and reflect certain types of radio signals ruining the continuity of the communications circuit. This is the subject of this paper.

The attached drawing, WIND-01 Figure 1 shows the drawing of a typical windmill. They consist of a metal pole, a wind generator mounted atop the pole, and a 100 foot tri-blade. Because the installation is all-metal, radio signals passing through the windmill are reflected or blocked. Worse yet, the moving blades cause the signal to be chopped. Think of trying to shine a flashlight through an oscillating fan. The once steady light passing blades becomes pulsed on the wall behind the fan.

On television sets of homeowners in or near the wind farm, the viewer will see their TV picture as a high-speed flicker as the blades pass through the signals. This is especially bad where the homeowner is trying to pull TV signals from 30-60 miles away. This will worsen as the country switches to high definition television (HDTV) because that signal is a synchronized computer bit stream not the present and much more forgiving analog signal.

With microwave, similar fading takes place. Microwave is a digital computer bit stream synchronized (timed precisely) between both ends of the circuit. As the blade passes through the beam or its companion first Fresnel zone, it causes the microwave receiver at the other end to lose signal or synchronization with the other end. While the blade rotates, the microwave system struggles to resynchronize itself only to have the next blade chop the signal. In the end, the microwave never resynchronizes unless the blades stop turning.

Public safety microwave is built to telephone company standards and the signal is framed into blocks of channels. Communications must take place in a real time (no delays) state. On the other hand, microwave links used for computer networks are not necessarily real time. If a circuit fails due to an encounter with a windmill's blade, the computer system will simply retry repeatedly to pass the message. If a synchronized public safety signal fails, the ambulance or fire truck may not come to someone's door!

A reasonable analogy might be a motion picture of an airplane propeller or a car tire turning. There are times that the moving device appears to slow, stop, and then reverse itself in the film. It is the strobe light effect as the pulsing interval of the film begins to match the rotating speed of the propeller or wheel and then leaves synchronization. It is possible and depending on the speed of the windmill's blades for the microwave beam to come in synchronization with the moving blades.

A microwave beam or a TV signal for that matter is not like a laser beam. Per the attached drawing WIND-02 Figure 1, as the beam leaves the antenna at either end, it fattens just like if you point a flash light at a wall and walk backwards. The main power of the radio beam lies in the main beam or the red area in the drawing. The first Fresnel (pronounced Fra'-nel) zone lies in the blue area. In Figure 2 of WIND-02, the white zones are higher Fresnel zones and contain little power. <u>The main beam and the first Fresnel zone must pass through the wind farm and not be reflected or chopped by any metallic members of the wind farm.</u> Depending where the microwave terminal points are and the frequency of the microwave signal, the Fresnel zone can be <u>hundreds of feet wide</u>. A complex mathematical formula can calculate the size of the Fresnel zone for any frequency passing through the farm.

Some but not all of the problem can be alleviated by the windmill designer using non metallic blades. However, I have been told a metal blade is part of the lightning protection for the facility and thus there is a resistance to using non-metallic blades. Even if they did, you still have the metal pole and generator units to block and reflect radio waves,

The wind farms do not seem to bother regular two-way radio transmissions. As the mobile communications industry switches from analog signals to synchronized digital signals (APCO-25 Standard), problems could develop because of the same mechanisms exist as with microwave.

I would not want a user to build a critical communications tower in a wind farm unless the windmills were at least ½ mile away—better yet a mile. As the electrical energy is generated, signals from high electric fields and degrading generating equipment can radiate noise that will degrade two-way radio system receivers in the range of 25-200 Megahertz.

WHAT SHOULD BE DONE IF SOMEONE WANTS TO BUILD A WIND FARM?

All is not lost if an application for a wind farm is submitted to a zoning authority. If one is received:

1. The applicant should employ a microwave search firm such as Micronet in Plano, Texas or Comsearch in Ashburn, Virginia to identify which FCC licensed microwave paths will pass through the proposed wind farm.
2. The zoning authority should alert City and County public safety, utility, pipeline company, and your school district to provide their licensed and unlicensed microwave point to point routing to the applicant. The wind farm can especially effect:
    a. Point to point microwave.
    b. Wireless computer networks- 802.11 systems, WAN.
    c. Instructional TV for schools
    d. DTN Weather used by farmers and construction companies.
    e. Intercity wired telephone via microwave
    f. Cellular cell-site interconnection via microwave
    g. The real problem is the unlicensed data links. They are not in any database. You must seek out potential critical use owners.
3. The applicant should retain a Registered Professional Engineer with radio experience to be part of the design team for the wind farm to allow for microwaves to pass unaffected through the farm as shown in the attached drawing WIND-01 Figure 2. This may be as simple as leaving aisles open in the wind farm windmill-grid.
4. A wind farm advocate has suggested to me that some form of registration system of windmills and critical wireless communications circuits by the state might be reasonable to the work above.
    a. Critical communications circuits,
        i. Whether FCC licensed or not,
        ii. Planned or existing,
        iii. Can be registered in a GIS file along with the precise location of the planned and existing windmills
    b. Then, as new critical communications circuits are designed, engineers can consult the GIS system and be advised of the presence of a proposed or existing wind farm. They can register funded but not yet build circuits.
    c. The same is true with the planner of a wind farm.
    d. This sounds reasonable but the big issue would be keeping the data current and informing the planners and installers in both industries.

The Federal Communications Commission, when licensing a microwave system, offers no protection from new man-made objects obstructing a microwave system. Critical infrastructure communications systems are expensive and usually in planning for a long time. The very owners of most critical infrastructure systems are the approvers of wind farms. Therefore, the governmental entity should protect their interests otherwise, the fire department may be signaled by the 911 center and never show up at the fire. A signal may go out from a pipe line to shut the valves on a leaking line and the valve never close.

Leonard J. Koehnen, PE
Consulting Engineer-Wireless Telecommunications Systems and Facilities
Registered Professional Engineer (Electrical)
Saint Paul, MN

We have written many other White Papers that may be of interest to you. They are freely distributed to clients and other interested parties at no charge. Please write for a copy.

Spectrum Re-Farming	Tower Ordinances	Over Renting of Community Water Tanks
FCC Licensing Issues with Channels Adjacent to New Mutual Aid Channels	Installation of Minneapolis/Saint Paul Metro 800 control stations	Consulting Services
		Utility Data Systems

WIND-01

DELETE WINDMILLS IN GRID TO PROVIDE AN AISLE FOR THE MICROWAVE BEAM

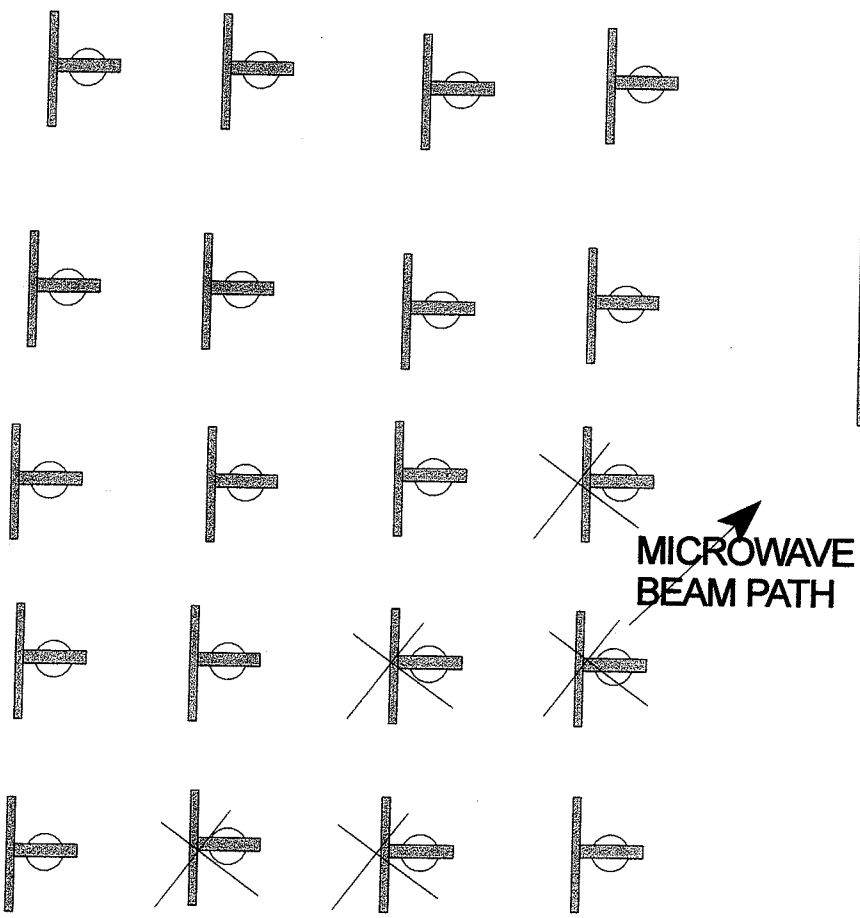

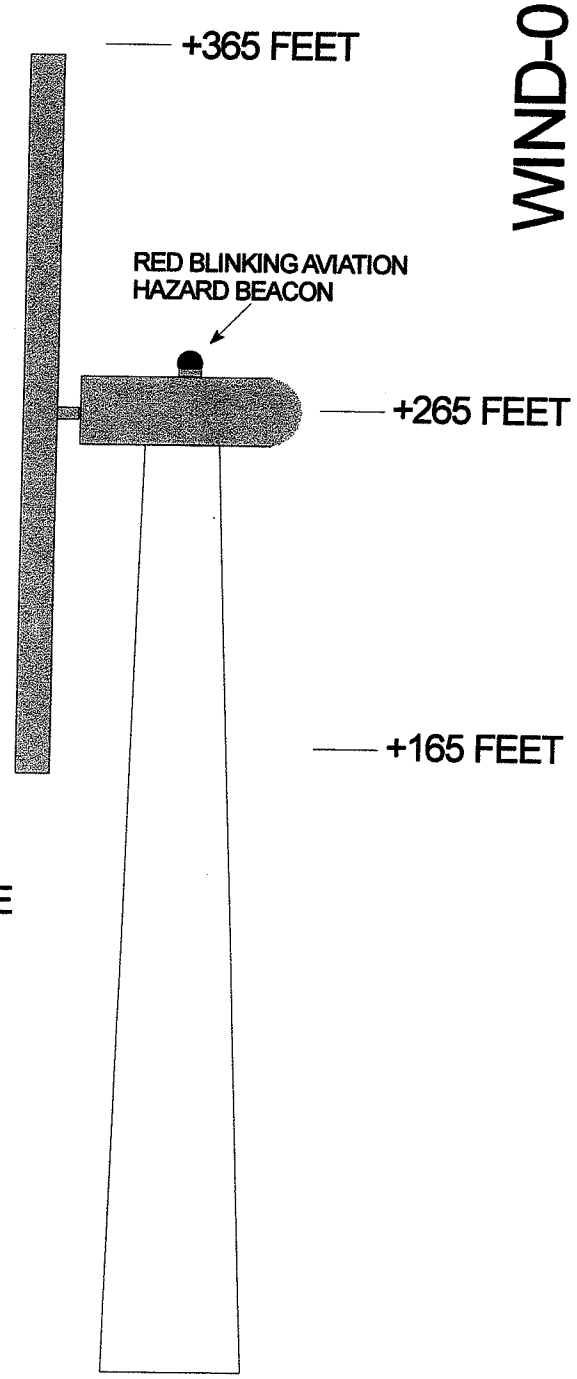

WIND-01

MICROWAVE BEAM PATH

FIGURE 2: WIND FARM INSTALLATION GRID

FIG 1: TYPICAL WINDMILL

REVISION HISTORY:	THIS DRAWING WAS PREPARED BY ME AND THAT I AM A REGISTERED PROFESSIONAL ENGINEER IN MINNESOTA.	WIND FARM EFFECTS ON MICROWAVE	
		STANDARD SPECIFICATIONS	
	LEONARD J. KOEHNEN, PE	Leonard J. Koehnen, PE Consulting Engineer Leonard J. Koehnen & Assoc., Inc. 9348 Jonathan Road Woodbury, MN 55125 651-739-1614	DATE: 12-20-04
	MINNESOTA 9298		REVISION: ORIG
			DWG: WIND-01

WIND-02

FIGURE 1: MICROWAVE BEAM
RED IS MAIN BEAM
BLUE IS FIRST FRESNEL ZONE

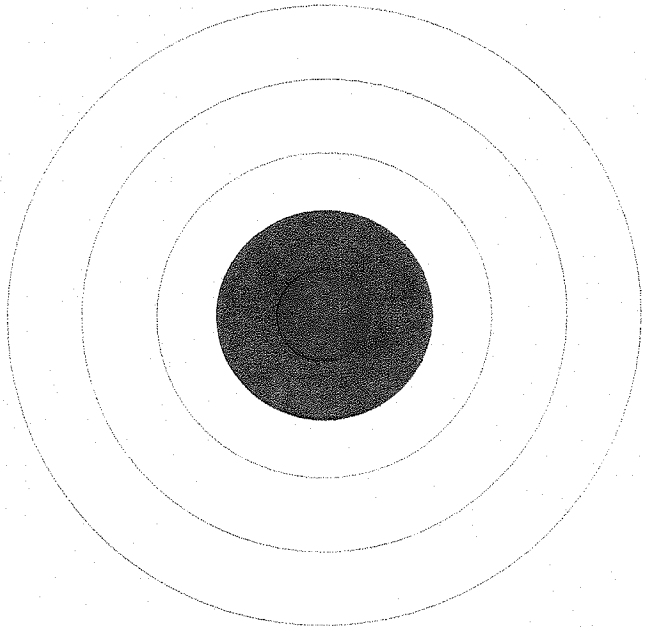

WIND-02

FIGURE 2: CROSS SECTION OF A MICROWAVE BEAM
RED IS THE PRIMARY BEAM
BLUE IS THE FIRST FRESNEL ZONE
WHITE ARE THE SECOND-THIRD ETC FRESNEL ZONES

REVISION HISTORY:	*THIS DRAWING WAS PREPARED BY ME AND THAT I AM A REGISTERED PROFESSIONAL ENGINEER IN MINNESOTA.*	MICROWAVE BEAM	
		STANDARD SPECIFICATIONS	
	LEONARD J. KOEHNEN, PE	*Leonard J. Koehnen, PE* *Consulting Engineer* *Leonard J. Koehnen & Assoc., Inc.* *9348 Jonathan Road* *Woodbury, MN 55125 651-739-1614*	DATE: 12-23-04
			REVISION: ORIG
	MINNESOTA 9298		DWG: WIND-02

LJK

WIRELESS COMMUNICATIONS ENGINEERING SERVICES FOR A NEW MILLENNIUM

www.911radio.net

Leonard J. Koehnen, and Associates, Inc. Consulting Engineers

Communications Engineering Services For the new Millennium

9348 Jonathan Road
Saint Paul, MN 55125
651-739-1614
Fax: 651-714-5868
lenk911@onvoymail.com

FIELDS OF EXPERTISE:

Dispatch Centers

Conventional Radio Systems

Trunking Radio Systems

Microwave Systems

T-1, Fiber and Data Systems

S.C.A.D.A and Remote Telemetry Systems

Tower, antenna, and filter system designs.

FCC Licensing

Designs over 3 million Dollars of Communications Systems per year.

EXPERIENCE EDUCATION & EXPERTISE:

Radio System Planning Since 1961

Radio System Engineering Since 1968

Independent Consulting Engineer Since 1984

Bachelor of Electrical Engineering- University of Minnesota 1965

Registered Professional Engineer (State Licensed)

Minnesota
Wisconsin
Iowa
Nebraska
Missouri
Kansas

MEMBER:

APCO
Lions Club
Editorial Review Board of *Radio Resource* Magazine

DEPARTMENT OF PUBLIC SAFETY COMMUNICATIONS

Brown County

3028 CURRY LANE
GREEN BAY, WISCONSIN 54311-4875

PHONE (920) 391-7400
FAX (920) 391-7406

Emergency Communication Services
9-1-1 Center Operations
Emergency Management

James V. Nickel, PE
Director

Director's Report
March 2, 2010

1. **Open House**

   We had a successful Ribbon-Cutting/Public Open House for the new 911 Communications Center and Emergency Operations Center last week on Tuesday evening, February 23rd.

2. **Computer Aided Dispatch (CAD) System Software Upgrade**

   Last week the team began testing the new software release. Testing will continue for a few weeks while we exercise all the functions and determine readiness for a cut to production. That cut-over is scheduled for the week of March 22nd.

3. **Radio Consultant RFP**

   Now that GeoComm has been selected as the Radio Consultant for the project; we have scheduled a first call with them to begin the project.

4. **Foxcomm Termination Costs**

   Attached is the detailed cost summary and invoices for the Foxcomm move. The physical move cost $4,200, with the remainder of the costs being telephone line cancellation charges and upgrades to the Calumet County Computer Room. Our total cost was $8,411.21.

5. **Karen Katers-Job Reclassification**

   With the elimination of the Emergency Management Office Manager and combining it with the PSC Office Manager position, we have filed the required paperwork for HR to reclassify the newly combined position.

6. **National Telcom Week Awards**

   The Awards ceremony is Tuesday, April 13, at 4 PM at the Museum.

7. **Retirement**

   I will retire on Friday. I have enjoyed working with you.

Turning Brown Green

INVOICE

CALUMET COUNTY
206 COURT ST
CHILTON, WI 53014-1198
(920) 849-1446

INVOICE NO: 9900285
DATE: 1/29/10

TO: BROWN COUNTY
ATTN: CAROLYN MARIQUE
305 E WALNUT ST
GREEN BAY, WI 54301

CUSTOMER NO: 1404/1404

TYPE: MS - Miscellaneous Customer

QUANTITY	DESCRIPTION	UNIT PRICE	EXTENDED PRICE
1.00	FOXCOMM 4TH QTR BILLING	35,053.20	35,053.20

COPY

TOTAL DUE: $35,053.20

PLEASE DETACH AND SEND THIS COPY WITH REMITTANCE

DATE: 1/29/10 DUE DATE: 3/01/10

NAME: BROWN COUNTY

CUSTOMER NO: 1404/1404

TYPE: MS - Miscellaneous Customer

REMIT AND MAKE CHECK PAYABLE TO:

CALUMET COUNTY TREASURER
ATTN: ACCOUNTS RECEIVABLE
206 COURT ST
CHILTON WI 53014-1198 (920) 849-1446

INVOICE NO: 9900285

TERMS: NET 30 DAYS

AMOUNT: $35,053.20

Calumet County, Wisconsin
Analysis of FOXCOMM Fund
For the year ending 2009

Foxcomm Expenses On Calumet County's Books:

Wages:	$	144,687.62
Fringes:		62,312.32
Employee Training:		25.00
Postage:		73.55
Photocopies:		46.91
Meeting Expense:		489.35
Mileage Expense:		14,945.35
Meal Expense:		145.13
Repair/Maint Other:		21,437.41
Telecommunications:		9,124.37
Capital Projects(Fed Grant):		295,134.85
Total Expenses	$	548,421.86
Federal Grant Revenue:		(295,134.85)
Net Expenses of Foxcomm:	$	253,287.01

	Brown 38.76%	Calumet 6.94%	Outagamie 27.51%	Winnebago 26.79%	Total
Amount Due from Counties:	98,174.05	17,578.11	69,679.26	67,855.59	253,287.01
Amount Paid from Counties:	63,120.85	11,301.83	44,800.17	43,627.68	162,850.53
4th Quarter Billing:	35,053.20	6,276.28	24,879.09	24,227.91	90,436.48

23

CALUMET COUNTY FINANCE DEPARTMENT

DANIEL A. DE BONIS, CPA
FINANCE DIRECTOR
debonis.dan@co.calumet.wi.us

Courthouse
206 Court
Chilton WI 53014-1198

Chilton - (920) 849-1446
Appleton/Sherwood - (920) 989-2700
Fax - (920) 849-1475

February 4, 2010

Brown County Finance
Attn: Carolyn Maricque
305 E. Walnut Street
Green Bay, WI 54301

Dear Ms. Maricque,

Per your request, attached are copies of invoices relating to the relocation of Foxcomm's primary equipment to Calumet County.

I've also enclosed two related worksheets as additional support for the invoices.

The first worksheet is an internal document we use in allocating telephone charges to our various departments. I thought this document would simplify your review in that the Verizon invoice contains thirty six pages of detail. I have enclosed only the total sheet of the Verizon invoice.

The second worksheet is a document summarizing the updates to our server room that were necessary as a result of the relocation. Calumet County recognized that a portion of the server room updates also benefited us and as a result tried to determine a measurement for allocating these cost. An inventory of the wattages and BTU/hr was taken for all of the equipment stored in our server room. It was determined that the Foxcomm equipment represented 29.31% of the electrical and cooling needs in our server room, so this was used as the basis for allocating those invoices.

If you require any additional information regarding this matter, please contact me.

Sincerely,

Daniel A. De Bonis
Finance Director

CC: Karen Carlson, Foxcomm Coordinator

Calumet County, Wisconsin
FOXCOMM Relocation Costs
Included in the 4th Quarter 2009 Billing

Vendor	Amount
System Connections, Inc	$ 4,200.00
Motorola, Inc	3,454.00
Baycom, Inc	942.00
AT&T	11,113.20
Verison	338.33
Brantmeier Electric	462.45
Johnson Controls	351.72
Sid Harvey Industries	839.04
	$ 21,700.74

Distribution of Costs:	
Brown County	$ 8,411.21
Calumet County	1,506.03
Outagamie County	5,969.87
Winnebago County	5,813.63
	$ 21,700.74

*Note these costs are included in
Repair/Maint Other & Telephone

V 10000
062529

Invoice

System Connections, Inc.
380 Brogdon Road
Suwanee, GA 30024
Ph: 678-990-1840 Fax: 678-990-1842

RECEIVED
SEP 17 2009
CALUMET COUNTY SHERIFF
CHILTON, WI

Date	Invoice #
9/10/2009	6039

Bill To

Calumet County
206 Court St
Chilton,WI 53014-1198

Ship To

Calumet County
Sheriff's Dept
206 Court St
Chilton, WI 53014-1198

P.O. Number	Terms	Rep	Ship	Via	F.O.B.	Project
062529	Net 30	MGB	9/10/2009			

Quantity	Item Code	Description	Price Each	Amount
1	Labor	Relocate S7400	1,200.00	1,200.00
1	Expenses		1,000.00	1,000.00
1	Shipping	Chilton, WI to Green Bay, WI	500.00	500.00
1	MAINTENANCE.	Maintenance on S7400 for 45 days, 9/10/09 - 10/25/09	1,500.00	1,500.00
		Sales Tax	0.00	0.00

on PR

Thank you for your business.

Total $4,200.00

23

MOTOROLA

1307 E. Algonquin Rd Schaumburg, IL 60196

Visit our web site at: www.motorola.com

INVOICE

062489

TOTAL INVOICE AMOUNT:	$3,454.00
MOTOROLA INVOICE NUMBER:	41136682
INVOICE DATE:	09/18/2009
PAYMENT DUE:	10/18/2009
CUSTOMER ACCOUNT NUMBER:	1000317132 0001
PURCHASE ORDER DATE:	06/29/2009
YOUR P.O.#:	062489

7

BILL TO CALUMET COUNTY SHERIFF DEPT

206 COURT ST
CHILTON, WI 53014

For questions concerning this invoice please contact Motorola at: 1-888-567-7347

00005-00005-00005

Payment Terms: NET 30 DAYS FROM INVOICE DATE

Motorola Federal Tax Id: 36-1115800

Sales Order Number: 0609014090008

Invoice Detail

Item	Model Number	Qty	Description	Unit Price	Amount
1		1	985 022 RENTAL/LEASE EQUIPMENT COMPUTERS, DATA PROCESSING, IMPLEMENT/INSTALL REMOTE CAD/FOC RECONNECT, BROWN CO	3,454.00	3,454.00
2		0	IF YOU HAVE ANY QUESTIONS CONCERNING THIS INVOICE PLEASE CONTACT MELINDA SLINKMAN AT 847-725-4549. THANK YOU FOR CHOOSING MOTOROLA!	0.00	0.00
			SUBTOTAL		3,454.00
			PLEASE PAY THIS AMOUNT (PAYMENT DUE: 10/18/2009)		3,454.00

RECEIVED
SEP 23 2009
CALUMET COUNTY SHERIFF
CHILTON, WI

Detach here and return bottom section with your payment.

Payment Coupon

INVOICE NUMBER	CUSTOMER ACCOUNT NUMBER	PAYMENT DUE
41136682	1000317132 0001	10/18/2009

Invoice Total	Amount Paid
$3,454.00	

Please put your Invoice Number and your Customer Account Number on your check for prompt processing.

CALUMET COUNTY SHERIFF DEPT

206 COURT ST
CHILTON, WI 53014

Send Payment To:

MOTOROLA

13108 COLLECTIONS CENTER DRIVE
CHICAGO, IL 60693

0401010306060802 1000317132 0001 0000 091809 0000345400 01

23

BAYCOM!

BAYCOM, INC.

SERVICE REPORT/JOB TICKET **120987**

Customer P.O.: 062532
Contract No.:
Terms: DUE UPON RECEIPT

Dropped Off By/Carrier: ROGER 88
Authorized By:
Service Location: Customer

Service Requested:
Reference Job Ticket 211003
MOVE NET CLOCK FROM GREEN BAY PD TO CALUMET CO SHEIFF BUILDING.

Received: 11/10/09
Completed: 9/08/09
Called:

Item Number: 9183
Description: net clock
Date: 11/10/09

Accessories:
NONE

Tech No.: 88
Unit/Loc./Vehicle: 1748

Tag No.:

Serial Numbers:
1748

Part No./Description		Qty	Amount
59520	LMR-400 3/8"	30	29.40
RFN-1006-3I	N MALE CRIMP 9913/LMR400	2	12.10

Service Performed
MOVED NET CLOCK. TESTS GOOD.
MOVED THE NET CLOCK. TESTS GOOD.

Parts	41.50
Tech Svc	1,325.00
Total Svc	1,366.50
Shipping/Handling	.00
Tax	.00
Total Due	**1,366.50**

Received By Signature: _____ Date: _____

ok to pay $942.00 PR

23

BAYCOM

BAYCOM, INC.

Customer P.O. No.	Ship Via	Terms
CR INV#120987		DUE UPON RECEIPT

Seq#	Ship qty / B.O. qty	Item number / Item Description	Unit Price	Loc.	U/M	Extension
1	1.00	TECH Technician Labor	424.50		GBMN HR	424.50-

Item summary	424.50-
Subtotal . .	424.50-
Shipping/Handling	.00
Sales Tax .	.00
Total Credit	424.50-
Credit Bal.	424.50-

RECEIVED
DEC - 7 2009
CALUMET COUNTY SHERIFF
CHILTON, WI

on PR

542 5260809

23

-----Original Message-----
From: PLAGGEMARS, JERRY L (ATTMIB) [mailto:jp3292@att.com]
Sent: Friday, January 08, 2010 3:22 PM
To: Karen Carlson
Cc: LANE JR., LEROY A (ATTAIS)
Subject: County of Brown-RDS010510OSI54245QU

> Karen,
> The circuit DHZA.000278..WT on account 920 Z02-1050 going from 307 S
> Adams, Green Bay, WI to 320 S Walnut, Appleton, WI will be
> disconnected on 1-19-2010 with an EBD (effective Bill Date) date of
> 12-31-09 on order C1301630344. The circuit DHZA.434454..WT on account
> 920 Z02-1050 going from 307 S Adams, Green Bay, WI to 4311 Jackson,
> Oshkosh, WI will be disconnected on 1-19-2010 with an EBD (effective
> Bill Date) date of 12-31-09. The Termination Charges will be
> $11,113.20. If you have any questions please email or call me.
> Thank-you and have a Terrific Day!!!!
>
> Jerry
>
> Jerry Plaggemars
> AT&T Sales Support Manager
> 616 724-3516 Ofc
> 517 304-1624 Cell
> jp3292 @att.com
>
> Confidential
> This e-mail and files transmitted with it are property of AT&T
> Communications and/or its affiliates, are confidential, and are
> intended solely for the use of the individual or entity to whom this
> e-mail is addressed. If you are not one of the named recipient(s) or
> otherwise have reason to believe you have received this message in
> error, please notify the sender at 616 530-3488 and delete this
> message immediately from your computer. Any other use, retention,
> dissemination, forwarding, printing, or copying of this e-mail is
> strictly prohibited.

Contract Revenue Compliance Team
Data Services Termination Liability Request

This form should only be used to request termination charges for the data products listed on the sales instructions tab. Contract Revenue Compliance (CRC) will compute termination charges and return the request to submitter. The standard turnaround time is **5 business days.** If the request is for **ten or more circuits** the turnaround time can be greater. You will receive an email if the standard turnaround time can not be met with the expected date of completion. Use the Multiple Circuits tab for requests of 10 or more circuits. For expedites, please indicate **"Expedite"** in the email subject line and mark the email urgent (!).

If this is AA+, include billing number for the T1 SPAN and the riding voice services. For T1 IAS **(Telco piece only)** include BTN for AA+ Span and riding voice services only (CRC only calculates the exchange portion of T1 IAS -Telco piece only). **This form excludes Usage, verbal, and expired ICB agreements. NO ASI PRODUCTS.**

Complete the required fields and email to the following:

East/Midwest DATA TERM CHARGES (AIT) **Southeast** SE TERM CHRG

Wholesale WHOLESALE DATA TRM CHGS **Southwest/West** SW-WDATATRMTEAM (AIT)

Please fill out all REQUIRED information. Incomplete forms will be returned.

Requestor's Name:	**Lee Lane**	**Date:**	**01/05/10**
Requestor's Phone Number:	**2627944452**	**Agency Name (if applicable):**	
Customer Billing Name:	**BROWN COUNTY FOXCOM**	**Select Region:**	**Midwest**

*********REQUIRED FIELDS MUST BE COMPLETE*********

CM File # (BCATS ID)	Select Product Type	REQUIRED BTN/BAN/ETN	REQUIRED Circuit ID/WTN/TER	REQUIRED Date of Disconnect	CRC USE ONLY Termination Charge
20070611-0569	DS1/Megalink	920 Z02 1050	DHZA.434454	12/31/09	$11,113.20

This is an Internal AT&T Document. Do Not forward to End User Customers

VERIZON SUMMARY BILL (920)197-0055

V#3232 9/19/2009

Includes 920-XG3-0474, 920-849-2361, and 920-849-8807
as of 11/6/06 - call 800-606-8855 for billing questions/problems, for tax issues 888-483-7976
You should not be paying more than $.04/min on the extended local calls.
If rates change, notify Accounting Manager and Maintenance Manager. Do not pay any bills with discrepancies, see Accounting Manager.

NEW CONTRACT EFFECTIVE 3/19/09 (charges decreased)

920-XG3-0474

MONTHLY SERVICE - BASIC

	Description	Description of Service	Qty	Unit Rate	Totals
BASIC					
	Mileage	Off Premise Extension Highway	6	3.25	19.50
	Channel termination	Private Line Circuit - Off Premise Hwy	2	5.35	10.70
OPTIONAL REGULATED					
	Mileage	Off Premise Extension Highway	25	1.75	43.75
	Private line mileage	Off Premise Extension Highway	32	2.00	64.00
			TOTAL FOR 920-XG3-0474		137.95

920-849-2361

MONTHLY SERVICE - BASIC

	Description	Description of Service	Qty	Unit Rate	Totals
BASIC					
	ISDN PRI T&V Pkg 1-3 Yr Term	T-1 Lines - PRI	1	620.00	620.00
	ISDN calling name delivery	ISDN - Caller ID/Names	1	40.00	40.00
	Addl directory listing	Directory Advertising Listings	48	4.00	192.00
	ISDN interstate access port	Access port for T-1 line	1	10.00	10.00
	ISDN PRI interstate access	ISDN/PRI Access ports for T-1 lines	1	37.00	37.00
OPTIONAL REGULATED					
	LN#9208491400				
	DID block of 100 numbers	T1 Lines	1	22.50	22.50
	LN#9208491600				
	DID block of 100 numbers	T1 Lines	1	22.50	22.50
	LN#9208492361				
	PBX DID numbers - block of 20	T1 Lines	1	8.00	8.00
				Subtotal	952.00
	OPERATOR ASSISTANCE (for 920-849-2335)	Directory Assistance Calls	0	1.25	0.00
	OPERATOR ASSISTANCE (for 920-849-2361)	Directory Assistance Calls	0	1.25	0.00
				Subtotal	0.00
	Extended Local Calling for 920-849-2335	Local Calling is free - Extended area only	0.00		0.00
	Extended Local Calling for 920-849-2361	Local Calling is free - Extended area only	0.00		69.96
				Subtotal	69.96
	BASIC SERVICE TAXES AND SURCHARGES				
	Emergency telephone service	State Mandated Fees - 911 Services etc.			0.35
	Police and Fire Protection Fee				0.75
	Federal Universal Service Fee	Federal Mandated Fees for Verizon Customers			10.34
				Subtotal	11.44
			TOTAL FOR 920-849-2361		1033.40

920-849-2361 Verizon Long Distance

MONTHLY SERVICE

Description		Qty	Unit Rate	Totals
Toll Free Number 877-765-8327	Solve Crime - Sheriff's Department	1	15.00	15.00
			Subtotal	15.00
Toll Free Calls	$.26/minute	0.64		0.64
			Subtotal	0.64
Taxes and Fees on Basic Services				
Federal Universal Service Fee - Verizon LD	Federal Mandated Fees for Verizon Customers			1.61
			Subtotal	1.61

23

TOTAL FOR 920-849-2361 Verizon Long Distance 17.25

7/2009-THERE SHOULD NEVER BE ANY OUTSIDE BILLING AS A BLOCK WAS PUT ON THESE LINES

920-849-8807

	Description	Description of Service	Qty	Unit Rate	Totals
BASIC	Key Line - measured rate	For Lines 920-849-4931,-4983,-7010,-9727	4	27.98	111.92
	CentraNet access line	Modem Lines (I.S. and Courthouse)	7	16.90	118.30
	Interstate access charge	For Lines 920-849-4931,-4983,-7010,-9727	4	7.40	29.60
	Interstate subscriber line charge	For the CentraNet Lines (I.S. and CTHSE)	7	7.40	51.80
OPTIONAL REGULATED					
	LN#9208494059				
	CentraNet feature package 1000	for CentraNet line	1	4.00	4.00
	LN#9208494146				
	CentraNet feature package 1000	for CentraNet line	1	4.00	4.00
	LN#9208494241				
	CentraNet feature package 1000	for CentraNet line	1	4.00	4.00
	LN#9208494318				
	CentraNet feature package 1000	for CentraNet line	1	4.00	4.00
	LN#9208497261				
	CentraNet feature package 1000	for CentraNet line	1	4.00	4.00
	LN#9208498807				
	CentraNet feature package 1000	for CentraNet line	1	4.00	4.00
	LN#9208498808				
	CentraNet feature package 1000	for CentraNet line	1	4.00	4.00
				Subtotal	**339.62**

16.90 x 5 Foxcomm lines = $84.50

7.40 x 5 Foxcom Lines = $37.00

4.00 x 5 Foxcomm lines = $20.00

BASIC SERVICE TAXES AND SURCHARGES			**Total By Department**
Emergency telephone service	State Mandated Fees - 911 Services etc.	3.85	
Police and Fire Protection Fee	State Mandated Fees (.75 per line)	0.08	
Police and Fire Protection Fee	State Mandated Fees (.75 per line)	7.50	[redacted]
WI USF Programs	State Mandated Fees - offset WI programs	3.80	[redacted]
Federal Universal Service Fee	Federal Mandated Fees for Verizon Customers	0.36	[redacted]
Federal Universal Service Fee	Federal Mandated Fees for Verizon Customers	1.44	[redacted]
Federal Universal Service Fee	Federal Mandated Fees for Verizon Customers	6.48	[redacted]
		Subtotal 23.51	[redacted]

Tax/Surcharge $9.17

Partial Month Charges 8/31/09-9/19/09	**5 FoxComm Lines @16.98/line**	**84.90**
Initial Order and Install for 5 CentraNet Lines		**102.06**
Local Calls		
920-849-8807		**0.06**
920-849-8808		**0.06**
920-849-4059		**0.36**
920-849-4146		**0.06**
920-849-4241		**0.06**
920-849-4318		**0.24**

Install $186.95

Foxcomm .72

TOTAL FOR 920-849-8807 **550.92**

GRAND TOTAL DUE SUMMARY BILL 920-197-0055 **1739.52**

338.34
(-.01)
338.33

Correct for Rounding

Account Distribution by Department

I.S.	515-0413	$ 30.24	
FOXCOMM	732-0413	$ ~~338.34~~	338.33
SHERIFF	542-0413	$ 93.42	
HIGHWAY	740-0413	$ 37.97	
MAINTENANCE	524-0413	$ 1,239.56	

run tape total, may be off $.01 due to rounding

Total new charges due **$ 1,739.52**

$0.00 This should be zero

L:\Finance Common\Phone Spreadsheets\VERIZON\VERIZON 920-197-0055 CURRENT Charge Breakdown.xls

Brantmeier Electric, Inc.

442 E. Breed St. • Chilton, Wisconsin 53014
Phone 920-849-2533 Fax 920-849-9036

Commercial, Industrial and Residential Wiring
Motor Repairing
Trenching

V 168
P 064316

Invoice

Dave Franz
Calumet County Courthouse
206 Court Street
Chilton, WI 53014

Invoice#: 13236
Invoice Date: 10/31/2009
Due Date: 11/30/2009
Phone#: (920) 849-2361

Job: Calumet County

Work Performed:
Labor & Material To Wire Up
New AC For The IT Room

Item	Description	Qty	Price	Total
T100	Labor and Material	1.00	825.00 E	825.00
		Material :		825.00
		Total Due		$825.00

Terms: Net 30 days / 1-1/2% after 30 days

RECEIVED
NOV 12 2009
CALUMET COUNTY
INFORMATION SERVICES

NOV - 6 2009

23

V168
63916

Brantmeier Electric, Inc.

442 E. Breed St. • Chilton, Wisconsin 53014
Phone 920-849-2533 Fax 920-849-9036

Commercial, Industrial and Residential Wiring
Motor Repairing
Trenching

V 168
P 063916

Invoice

Calumet County Courthouse
206 Court Street
Chilton, WI 53014

Invoice#: 13152
Invoice Date: 9/30/2009
Due Date: 10/30/2009
Phone#: (920) 849-2361

10/30

Job: Calumet County Court House

Work Performed:
Computer Room Outlets

Item	Description	Qty	Price		Total
300000	1/2" EMT	60.00	19.89	C	11.93
1516	1/2" SS Steel Cplg	9.00	26.03	C	2.34
52151	4" Sq Box 1-1/2"D 1/2&3/4*	1.00	1.04	E	1.04
52171	4" Sq Box 2-1/2"D 1/2&3/4*	2.00	1.65	E	3.30
202640	4" Sq Flat Blank Cover	3.00	0.39	E	1.17
316120	1/2" Bushed Conduit Nipple	2.00	57.95	C	1.16
1396	1/2" SS Steel Conn	6.00	22.75	C	1.37
327460	1/2" 1-Hole Strap	8.00	15.98	C	1.28
328980	1/2" Unistrut Clamp	2.00	127.40	C	2.55
341000	341 Tan Wirenut	6.00	119.04	M	0.71
401380	#12 THHN CU Stranded Wire	265.00	132.67	M	35.16
5362IG	20A/125V Spec Iso Grd Duplex	4.00	585.10	C	23.40
202140	1G Plastic Duplex Recept. Plate	2.00	33.84	C	0.68
202100	2G Plastic Duplex Recpt. Plate	1.00	60.19	C	0.60
PT1ABC5	Premisetrak Single Channel Raceway	10.00	1.22	E	12.20
T100	Conduit Adapter	2.00	4.75	E	9.50
T101	Hubbell Large Box	2.00	4.80	E	9.60
T102	Hubbell 2 Gang Box	1.00	7.80	E	7.80
MC	Misc Items - Tape, Screws, Bolts, Etc.	1.00	5.00	E	5.00
		Material :			130.79
L5200	Labor	11.00	52.00	H	572.00
		Labor :			572.00
		Total Due			$702.79

Terms: Net 30 days / 1-1/2% after 30 days

RECEIVED
OCT 15 2009
CALUMET COUNTY
INFORMATION SERVICES

OCT 14 2009
PERSONNEL

23

Johnson Controls

ORIGINAL INVOICE

Building Efficiency
Federal ID 39-0380010

V 1647
P 064370

Invoice: 0911101499
PO #/Auth: DAVE FRANZ
Customer: 1009853

Invoice Date: 11-10-2009
Service Order: 601-1022552
Order Type: Service Order

Bill To:
CALUMET COUNTY
ATTN: FINANCE DEPARTMENT
206 COURT STREET
CHILTON WI 53014

Work Site:
CALUMET COUNTY COURTHOUSE
ATTN: FINANCE DEPARTMENT
206 COURT STREET
CHILTON WI 53014

Requested By: FRANZ DAVE
Phone: 9209892700

Invoice Comments: THANK YOU FOR YOUR BUSINESS. INSTALLED SPLIT A/C SYSTEM IN IT SERVER ROOM.

Total Quote Price		**$1,200.00**
Taxes		**$0.00**
Total Due	**USD**	**$1,200.00**

Payment Due Upon Receipt of Invoice **Direct Billing Inquiries: 8668544713**

Terms: If any invoice is not paid in full within 30 days, the Customer hereby agrees to pay interest at a rate of 1.5% per month (18% annually) upon the unpaid portion of the invoice. If action or suit is brought by Johnson Controls, Inc. to collect any amount due or owing under this bill; Customer agrees to pay all costs of collection including attorney's fees.

Disposable, Environmental & Usage (DEU) fee listed on this invoice may include charges for one or more of the following miscellaneous: electrical, pneumatic, welding supplies, hardware materials, cleaning supplies, or refrigerant reclaim disposal. A lump sum charge was applied rather than itemizing usage.

We hereby certify that these goods are produced in compliance with all applicable requirements of sections 6, 7, and 12 of the Fair Labor Standards Act of 1938, as amended, and of regulations and orders of the Administrator of the Wage and Hour Division issued under section 14 thereof.

RECEIVED
NOV 13 2009
PER

Please reference our Invoice Number and amount with your payment and send ONLY to the address on this invoice.

Payment Terms: DUE UPON RECEIPT

Direct Billing Inquiries
To Service Department: 8668544713

To Remit Via Credit Card:
Call the phone number listed above.

INVOICE #: 0911101499
AMOUNT DUE: $1,200.00

Remit Payment To:
Johnson Controls, Inc.
P.O. Box 905240
Charlotte, NC, 28290

RECEIVED
NOV 16 2009
CALUMET COUNTY
INFORMATION SERVICES

To Remit Via ACH Wire Transfer:
JPMorgan Chase Bank - One First National Plaza
Chicago, IL 60670
ABA #071-000013 Depositor Acct #55-14347
Type of Account: Checking

SV0910020825@@1

23

MAKE CHECKS PAYABLE AND REMIT TO

SID HARVEY INDUSTRIES, INC.

605 LOCUST STREET • GARDEN CITY, NY 11530-6531

www.sidharvey.com

Sid Harvey

PURCHASED AT

STORE# 0108
935 N. PERKINS
APPLETON, WI 54911

TELEPHONE: (920) 735-0606
FAX.....: (920) 735-6510
EMAIL: store108@sidharvey.com

INVOICE #	108016269
INVOICE DATE	10/14/09

Please include your account number on all remittances.

SOLD TO
0062954
CALUMET COUNTY
206 COURT ST
CHILTON, WI 53014

SHIP TO
0000001
CALUMET COUNTY
206 COURT ST
CHILTON, WI 53014

V 7121
P 063825

STOMER ORDER NUMBER	ORDER DATE	SHIP VIA	TERMS	DATE SHIPPED	SALES TAX EXEMPT NUMBER
063825 DAVE FRANTZ	10/08/09	SID HARVEY TRUCK	NET 10TH	10/14/09	ES 45147

SPECIAL INSTRUCTIONS

SLS# 01081

ORD.	QTY. SHP'D	QTY. B.O.	ITEM NUMBER	MFG. NUMBER	DESCRIPTION	UNIT PRICE	UOM	AMOUNT
			920-849-1611 dave franz					
[redacted]								
	1	1	0 AOU36CLX	AOU36CLX	UNIT,COND,OUTDOOR,36K,R410A	1622.10	EA	1622.10
[redacted]								
	1	1	0 ASU36CLX	ASU36CLX	UNIT,EVAP,INDOOR,36K,R410A	1081.41	EA	1081.41
[redacted]								
	1	1	0 AD-87	AD87	ADAPTER, R410,FU31TSU	4.19	EA	4.19
[redacted]								
					FLARE, MINI-SPLITS			
[redacted]								

ANCE CHARGE OF 1 ½% PER MONTH WILL BE CHARGED ON ALL PAST DUE AMOUNTS.
ETURNS MUST BE AUTHORIZED AND RETURNED TO PLACE OF PURCHASE.
& RESTOCKING CHARGE WILL BE MADE ON ALL MATERIALS RETURNED FOR CREDIT.
ASH REFUNDS ISSUED AT THE BRANCH. ALL CASH REFUNDS WILL BE MAILED FROM OUR CORPORATE OFFICE.

ALL MERCHANDISE WAS RECEIVED UNDAMAGED

RECEIVED
OCT 16 2009
CALUMET COUNTY
INFORMATION SERVICES

CEIVED BY: X Dave Franz

Customer Phone #: 920-849-1446 Fax #: 920-849-1475

SHIPPING/HANDLING	.00
RESTOCK FEE	.00
SUB TOTAL	2862.56
SALES TAX	.00
INVOICE TOTAL	2862.56
DEPOSIT	.00
BALANCE DUE	2862.56

ORDER #: 108312704-00 TAKER: GE2 TIME: 10:20:03

STORE COPY

23

Calumet County

	Amps	Watts	BTU/hr
1	0.5	55.0	187.55
11	5.0	550.0	1875.5
17	2.5	275.0	937.75
19	2.5	275.0	937.75
23	0.0	0.0	0
25	0.0	0.0	0
29	0.0	0.0	0
31	0.0	0.0	0
2	0.0	0.0	0
6	8.5	935.0	3188.35
8	11.0	1210.0	4126.1
12	5.5	605.0	2063.05
14	0.0	0.0	0
18	5.5	605.0	2063.05
20	2.5	275.0	937.75
24	0.0	0.0	0
26	6.0	660.0	2250.6
Ttl		5445.0	18567.5

kVA	BTU/hr
6.81	18567.5

FoxComm

	Amps	Watts	BTU/hr
5	12.0	1320.0	4501.2
13	10.0	1100.0	3751
30	3.5	385.0	1312.85
Ttl		2805.0	9565.1

kVA	BTU/hr
3.51	9565.1

State of Wisconsin

	Amps	Watts	BTU/hr
7	12.0	1320.0	4501.2
Ttl		1320.0	4501.2

kVA	BTU/hr
1.65	4501.2

12.0	32633.7

November 2009

		kVA	BTU/hr
Calumet County	56.90%	6.81	18567.5
FoxComm	29.31%	3.51	9565.05
State of Wisconsin	13.79%	1.65	4501.20
		11.96	32633.70
			2.719475 Cooling Tons

2009 Server room Upgrades 516-0880 CR

$5,640.35 x 29.31% = $1,653.21

$702.79 **Electrical Expansion**

Brantmeier Electric

$702.79

1.00	Electrical Outlet Expansion- Material	130.79	130.79
1.00	Electrical Outlet Expansion- Labor	572.00	572.00

$4,937.56 **A/C Expansion**

Brantmeier Electric

$875.00 — Wiring AC

1.00	Server Room Air Handler Wiring	875.00	875.00

Johnson Controls

1,200.00 — Install AC

1.00	Server Room Air Handler Install	1,200.00	1,200.00

Sid Harvey Industries

$2,862.56

1.00	Unit, Cond, Outdoor	1,622.10	1,622.10
1.00	Unit, Evap, Indoor	1,081.41	1,081.41
1.00	Misc Parts	159.05	159.05